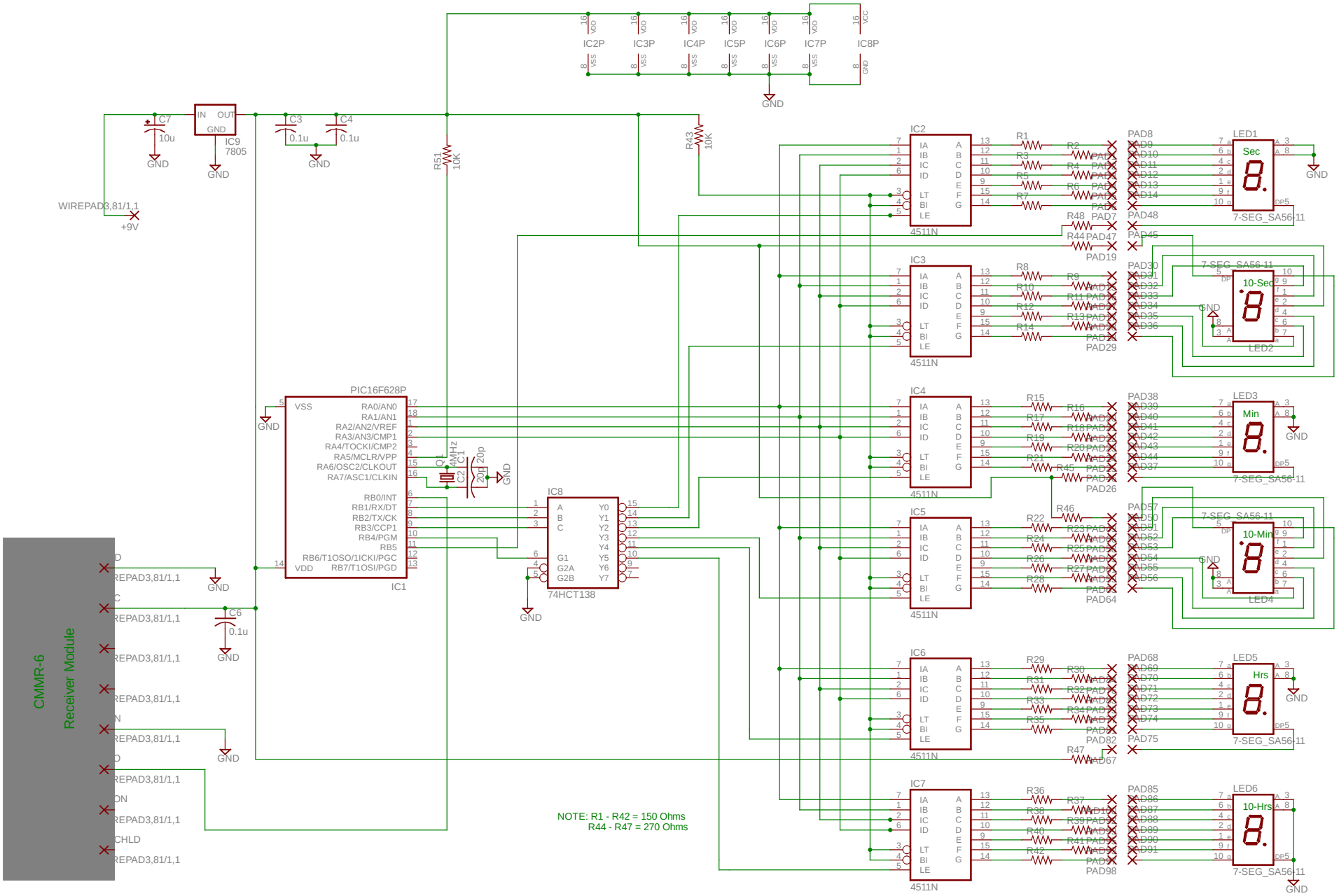

12/16/2008 1:51:22 PM f=0.75 C:\Documents and Settings\Bruce\My Documents\eagle\New_Project\my_clock_2.sch (Sheet: 1/1)